READ THIS FIRST

We have designed your telephone to conform to federal regulations and you can connect it to most telephone lines. However, each device you connect to the phone line draws power from it. This power draw is the device's *Ringer Equivalence Number*, or REN. The REN is shown on the bottom of your phone.

If you are using more than one phone or other device on the line, add up all the RENs. If the total is more than five (or three in rural areas), your phones might not ring. If ringer operation is impaired, remove one of the devices from the line.

If your phone causes problems on the phone line, the telephone company can disconnect your service. The phone company tries to notify you in advance. If advance notice is not practical, the telephone company notifies you as soon as possible and advises you of your right to file a complaint with the FCC.

The phone company can also make changes to its lines, equipment, operations, or procedures that could affect the phone's operation. The phone company notifies you in advance, so you can take the necessary steps to prevent interruption of your phone service.

FCC STATEMENT

Your telephone complies with Part 68 of *FCC Rules*. You must, upon request, provide the FCC registration number and the REN to your telephone company. These numbers are shown on the bottom of your phone.

Note: You must not connect your telephone to:

- coin-operated systems
- party-line systems
- most electronic key phone systems

This telephone has been ETL tested and complies with all FCC standards.

CARE

- Keep the phone dry.
- Handle the phone carefully. Do not drop it.
- Use and store the phone in normal temperature environments.
- Keep the phone away from dust and dirt.

Modifying or tampering with the phone's internal components can cause a malfunction and invalidate its warranty and void your FCC authorization to operate it. If the phone is not performing as it should, take it to your local RadioShack store for assistance. If the trouble is affecting the phone lines, the phone company can ask you to disconnect your phone until you have resolved the problem.

Limited One-Year Warranty

This product is warranted by RadioShack against manufacturing defects in material and workmanship under normal use for one (1) year from the date of purchase from RadioShack company-owned stores and authorized RadioShack franchisees and dealers. EXCEPT AS PROVIDED HEREIN, RadioShack MAKES NO EXPRESS WARRANTIES AND ANY IMPLIED WARRANTIES, INCLUDING THOSE OF MERCHANTABILITY AND FITNESS FOR A PARTICULAR PURPOSE, ARE LIMITED IN DURATION TO THE DURATION OF THE WRITTEN LIMITED WARRANTIES CONTAINED HEREIN. EXCEPT AS PROVIDED HEREIN, RadioShack SHALL HAVE NO LIABILITY OR RESPONSIBILITY TO CUSTOMER OR ANY OTHER PERSON OR ENTITY WITH RESPECT TO ANY LIABILITY, LOSS OR DAMAGE CAUSED DIRECTLY OR INDIRECTLY BY USE OR PERFORMANCE OF THE PRODUCT OR ARISING OUT OF ANY BREACH OF THIS WARRANTY, INCLUDING, BUT NOT LIMITED TO, ANY DAMAGES RESULTING FROM INCONVENIENCE, LOSS OF TIME, DATA, PROPERTY, REVENUE, OR PROFIT OR ANY INDIRECT, SPECIAL, INCIDENTAL, OR CONSEQUENTIAL DAMAGES, EVEN IF RadioShack HAS BEEN ADVISED OF THE POSSIBILITY OF SUCH DAMAGES.

Some states do not allow the limitations on how long an implied warranty lasts or the exclusion of incidental or consequential damages, so the above limitations or exclusions may not apply to you.

In the event of a product defect during the warranty period, take the product and the RadioShack sales receipt as proof of purchase date to any RadioShack store. RadioShack will, at its option, unless otherwise provided by law: (a) correct the defect by product repair without charge for parts and labor; (b) replace the product with one of the same or similar design; or (c) refund the purchase price. All replaced parts and products, and products on which a refund is made, become the property of RadioShack. New or reconditioned parts and products may be used in the performance of warranty service. Repaired or replaced parts and products are warranted for the remainder of the original warranty period. You will be charged for repair or replacement of the product made after the expiration of the warranty period.

This warranty does not cover: (a) damage or failure caused by or attributable to acts of God, abuse, accident, misuse, improper or abnormal usage, failure to follow instructions, improper installation or maintenance, alteration, lightning or other incidence of excess voltage or current; (b) any repairs other than those provided by a RadioShack Authorized Service Facility; (c) consumables such as fuses or batteries; (d) cosmetic damage; (e) transportation, shipping or insurance costs; or (f) costs of product removal, installation, set-up service adjustment or reinstallation.

This warranty gives you specific legal rights, and you may also have other rights which vary from state to state.

RadioShack Customer Relations,
200 Taylor Street, 6th Floor, Fort Worth, TX 76102

We Service What We Sell *04/99*

RadioShack
A Division of Tandy Corporation
Fort Worth, Texas 76102

10A99

811080770C
Printed in China

RadioShack®

ET-182 Tone/Pulse Desk Phone

- **Touch Tone or Pulse Dialing**
- **Adjustable Ringer**
- **Last Number Redial**
- **Hold**
- **Hearing-Aid Compatible**

Owner's Manual

Cat. No. 43-474 A (White)
43-475 A (Black)

INSTALLING THE PHONE

Connecting the Handset Cord

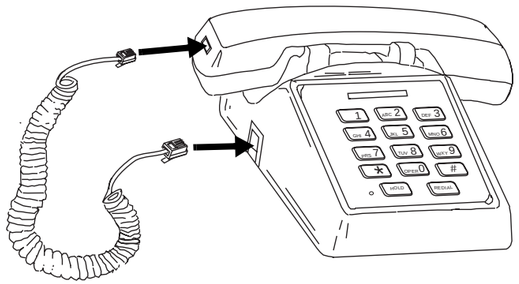

Connecting to the Phone Line

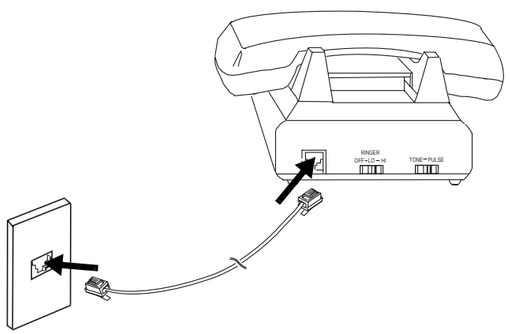

Note: The USOC number of the jack to be installed is RJ11C.

CAUTION

RISK OF ELECTRIC SHOCK
DO NOT OPEN

This symbol is intended to inform you that parts inside the telephone present a risk of electric shock.

This symbol is intended to alert you to important operating and servicing instructions included in the papers with the telephone.

USING THE PHONE

Press and hold down to disconnect a call. Press and release for special services such as Call Waiting.

Note: If you do not subscribe to any special services, pressing the switchhook might disconnect the call.

Adjust the handset volume to a comfortable listening level — **LO** (Low), **MED** (Medium), or **HI** (High).

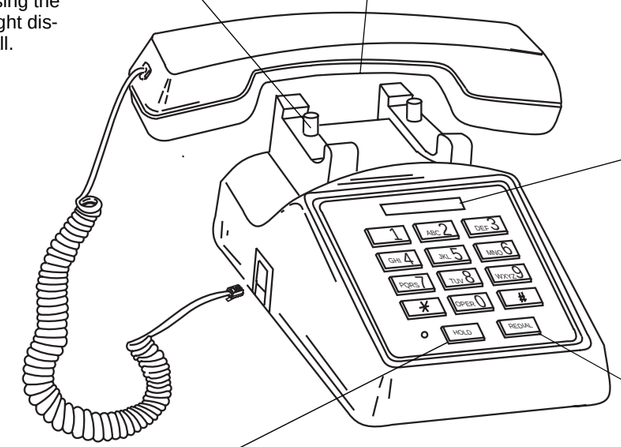

Use a paper clip or other pointed object to lift the plastic cover off the number plate. Then write your phone number on the number plate and replace the cover.

Press **REDIAL** to dial the last number dialed (up to 31 digits).

To put a call on hold, press **HOLD**. Then you can place the handset on the cradle without disconnecting the call. The indicator beside the button lights steadily when a call is on hold. To return to the call, lift the handset from the cradle or press the switchhook.

Set the ringer for a high- or low-volume ring, or turn off the ringer. You can make calls with the ringer off, and you can receive calls if you hear another phone on the same line ringing.

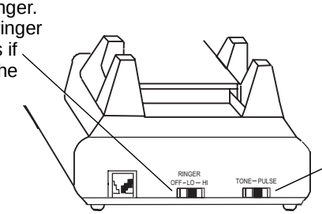

Set to **TONE** or **PULSE** to match the type of service you have. If you have pulse (rotary) service, you can switch to **TONE** during a call to use tone services.

© 1999 Tandy Corporation.
All Rights Reserved.
RadioShack is a registered trademark used by Tandy Corporation.